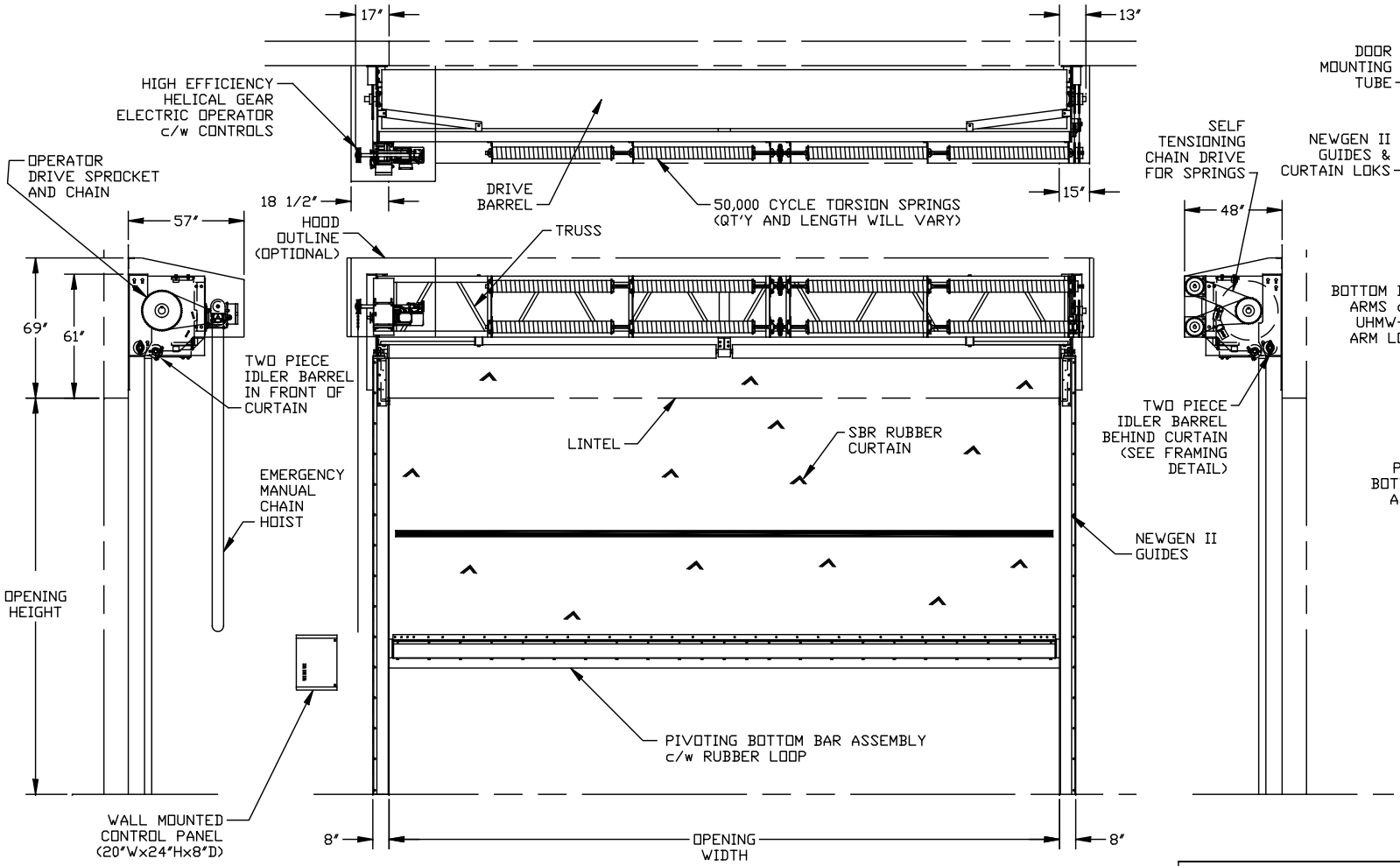

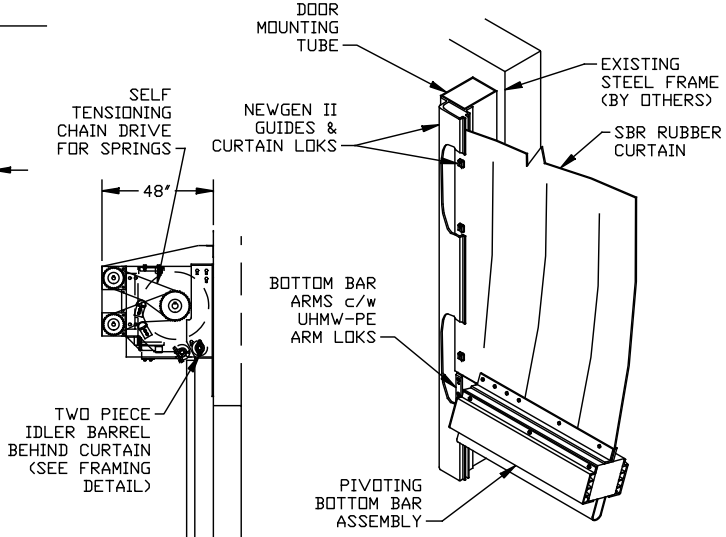

NEWGEN II GUIDE AND CURTAIN LOK SYSTEM STEEL JAMB MOUNTING

IMPORTANT: SEE DRAWING D-600-0113 FOR FRAMING REQUIREMENTS

MECHANICAL OPTIONS	ELECTRICAL OPTIONS	STANDARD SYSTEM INCLUDES
☐ - *** GALV. DOOR HOODS	☐ - RELAY LOGIC CONTROLS	- BLACK SBR CURTAIN
☐ - 16" x 16" WINDOWS, QTY. _____	☐ - FUSED DISCONNECT	- NEMA 4, WALL MOUNTED CONTROL PANEL
☐ - BLUE EPDM CURTAIN	☐ - LOOP DETECTOR	- PROGRAMMABLE CONTROLLER
☐ - GRAY EPDM CURTAIN	☐ - WIRELESS RECEIVER (OCS)	- CONSTANT PRESSURE CLOSE
☐ -	☐ - WIRELESS TRANSMITTER (OCS), QTY. _____	- NEMA 4 LIMIT BOX ON OPERATOR
☐ -	☐ - N 4X, PUSHBUTTON ST'N, QTY. _____	- 50,000 CYCLE COUNTERBALANCE SPRINGS
☐ -	☐ - MOTION DETECTOR, QTY. _____	- PIVOTING BOTTOM BAR (PATENTED)
☐ -	☐ - ADD. THRU-BEAM PHOTOEYE, QTY. _____	- 5" HIGH, BLACK EPDM RUBBER LOOP
☐ -	☐ - WIRELESS AIR WAVE REVERSING EDGE	- NEWGEN II GUIDE AND CURTAIN LOK SYSTEM
☐ -	☐ -	- TWO PIECE IDLER BARREL - BEHIND CURTAIN
☐ -	☐ -	- TWO PIECE IDLER BARREL - IN FRONT CURTAIN
☐ -	☐ -	

TNR INDUSTRIAL DOORS INC.

SHOP DRAWING, MODEL HDXL 9B, LEFT HAND

EXT. DETAIL:	DOOR MT. OPERATOR & C'BAL SPRINGS, 2 PC. IDLER		
LIMITATIONS:	(25' 0" < O.W. <= 40' 0") & (25' 0" < O.H. <= 35' 0")		
DATE DR'N:	DEC. 11, 2009	REVISION:	G - SEPT. 25, 2015
DRAWN BY:	R.B.	DRAWING No.:	D-600-0049
ELECTRICAL CRITERIA:			
CONTROL PANEL NEMA/EEMAC 4 STD.			
PRIMARY POWER SUPPLY: ____Volts, 3 Phase, 60 Hertz			
OPERATOR CRITERIA: HG, HIGH EFFICIENCY HELICAL GEAR			
LIMIT BOX NEMA/EEMAC 4 STD.			
_3_ HP, DOOR SPEED: OPEN & CLOSE UP TO @ _12_ ips			
END USER:			
DEALER:			
DOOR SIZE:		SERIAL No.:	